Technical data

Standard version

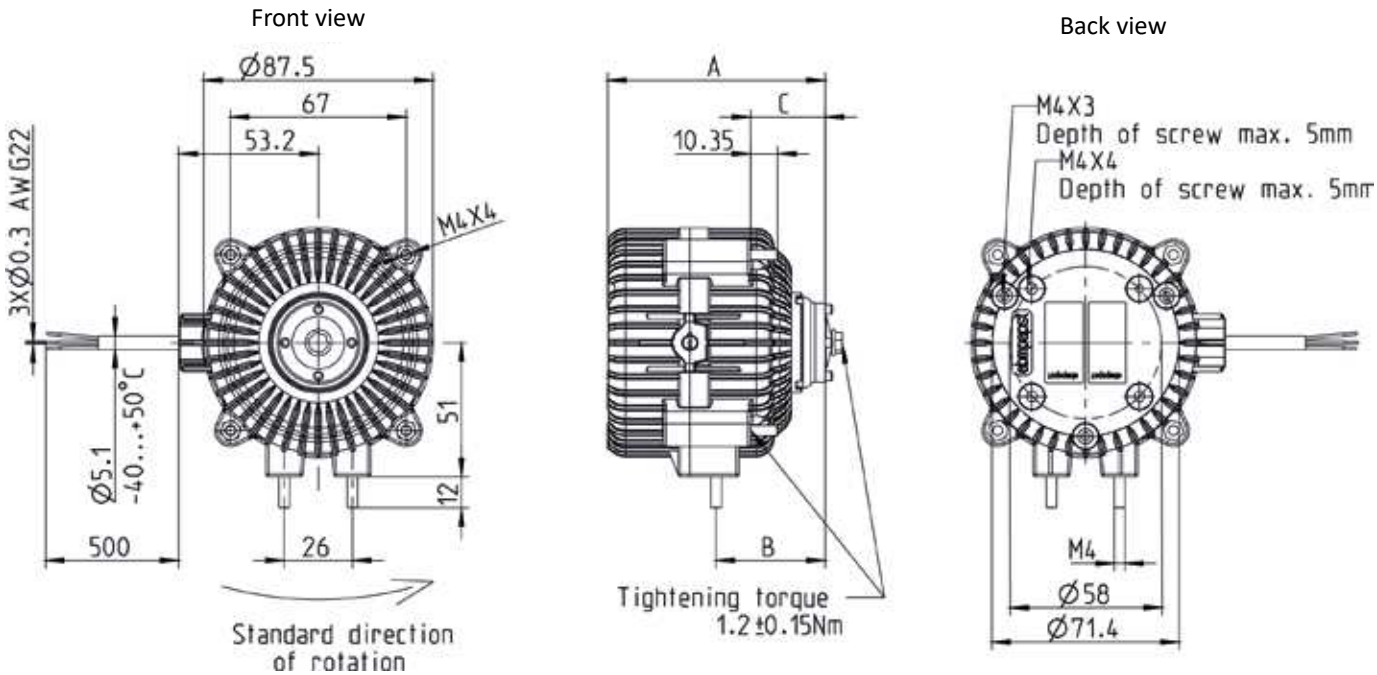

Nominal data		Nominal voltage	Frequency	Speed/rpm	Output power	Perm. Amb. Temp.	Mass	Dimensions		
Type	Feature	V	Hz	rpm	W	°C	Kg	A	B	C
iQC 3608	ROS**, 1 Speed	220-240	50/60	Max. 1800	6.5	-40..+50	0.5	83	41.5-43.5	28.5
	ROS**, 2 Speed	220-240	50/60	900*/1800	6.5	-40..+50	0.5			
	ROD	220-240	50/60	Max. 1800	6.5	-40..+50	0.5			
iQC 3612	ROS**, 1 Speed	220-240	50/60	Max. 1800	15	-40..+50	0.5	85	43.5-45.5	30.5
	ROS**, 2 Speed	220-240	50/60	900*/1800	15	-40..+50	0.5			
	ROD	220-240	50/60	Max. 1800	15	-40..+50	0.5			
iQC 3608	ROS**, 1 Speed	115	50/60	Max. 1800	6.5	-40..+50	0.5	83	41.5-43.5	28.5
	ROS**, 2 Speed	115	50/60	900*/1800	6.5	-40..+50	0.5			
	ROD	115	50/60	Max. 1800	6.5	-40..+50	0.5			
iQC 3612	ROS**, 1 Speed	115	50/60	Max. 1800	15	-40..+50	0.5	85	43.5-45.5	30.5
	ROS**, 2 Speed	115	50/60	900*/1800	15	-40..+50	0.5			
	ROD	115	50/60	Max. 1800	15	-40..+50	0.5			

*900rpm could be changed on demand(100 integer multiple)
**ROS could be cancelled on demand ROS: reverse on start 700rpm ROD: reverse on demand 500rpm